Art. 1004WF

Single-hole washbasin mixer

- spout projection 11 cm
- handle
- flow restrictor 5 l/min at 3 bar
- flexible supply lines
- without waste

Project:

Room:

Date:

Comments:

Finishes:

☐	**Chrome**	51 02 1004WF
☐	**Matt white**	51 29 1004WF
☐	**Matt black**	51 13 1004WF

Aerator class X

Pressure (bar)	flow rate (l/min)
0,5	3
1	5
2	6
3	7
4	8

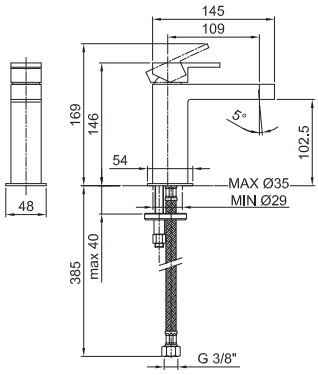

Certifications/Awards: